MITSUBISHI ELECTRIC

Changes for the Better

SPLIT-TYPE, HEAT PUMP AIR CONDITIONERS

Revision:C
- PARTS LIST and RoHS PARTS LIST have been changed.

Please void OB388 REVISED EDITION-B

INDOOR UNIT

SERVICE MANUAL

No. OB388
REVISED EDITION-C

Wireless type
Models

MSZ-GA50VA - E1
MSZ-GA60VA - E1
MSZ-GA71VA - E1

Outdoor unit service manual
MUZ-GA•VA Series (OB389)
MXZ-A•VA Series (OB377)

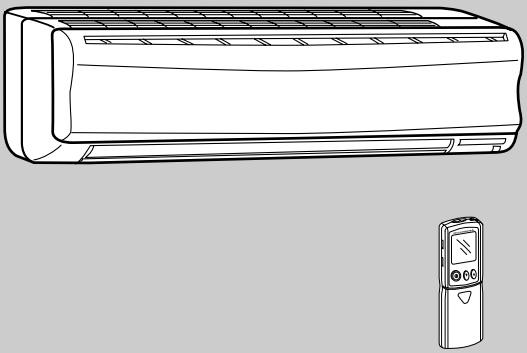

CONTENTS

NOTE:
RoHS compliant products have <G> mark on the spec name plate.
For servicing of RoHS compliant products, refer to the RoHS Parts List.

CE

Revision:A

Part number of INDOOR HEAT EXCHANGER has been corrected..

Model	Revise point	Part Name	Part No.	
			Incorrect	Correct
MSZ-GA60VA -E1	11-2.No.10	INDOOR HEAT EXCHANGER	E02 819 620	E02 851 620

Revision:B

- RoHS PARTS LIST has been added.
- 9-2. Failure mode recall function has been changed.

Revision:C

- PARTS LIST and RoHS PARTS LIST have been changed.

1 TECHNICAL CHANGES

MSZ-A18YV -E1 → MSZ-GA50VA -E1
MSZ-A24YV -E1 → MSZ-GA60VA -E1
MSZ-A26YV -E1 → MSZ-GA71VA -E1

1. Indication of capacity has been changed.(BTU base →kW base)
2. Power supply cord has been removed.
3. Indoor electronic control P.C. board has been changed.
4. Indoor fan motor has been changed. (AC → DC)
5. Shape of motor band and motor bed have been changed.
6. Symbol on terminal block has been changed (to S1/S2/S3).

2 PART NAMES AND FUNCTIONS

MSZ-GA50VA
MSZ-GA60VA
MSZ-GA71VA

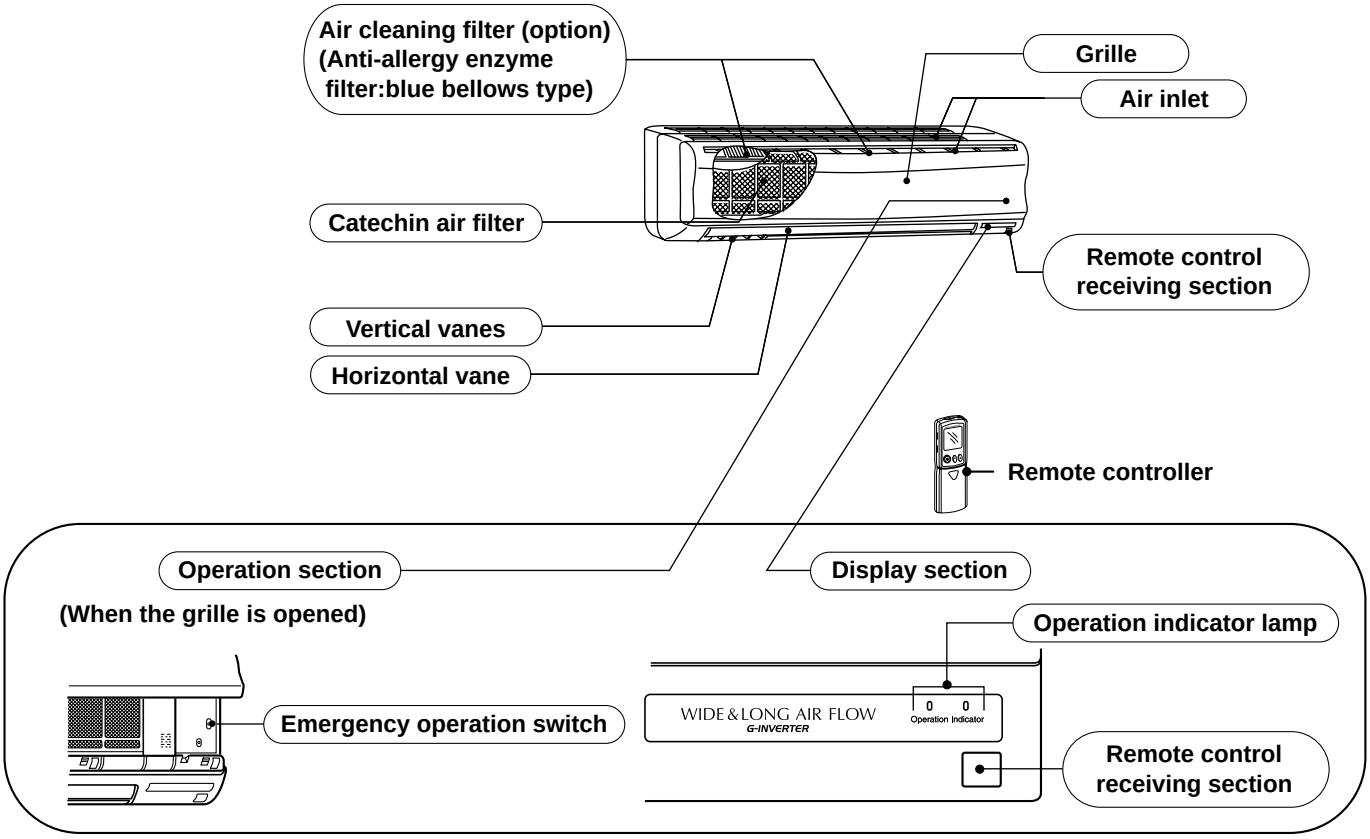

ACCESSORIES

①	Installation plate	1
②	Installation plate fixing screw 4 × 25 mm	7
③	Remote controller holder	1
④	Fixing screw for ③ × 3.5 × 1.6 mm (Black)	2
⑤	Battery (AAA) for remote controller	2
⑥	Wireless remote controller	1
⑦	Felt tape (Used for left or left-rear piping)	1

REMOTE CONTROLLER

MSZ-GA50VA
MSZ-GA60VA
MSZ-GA71VA

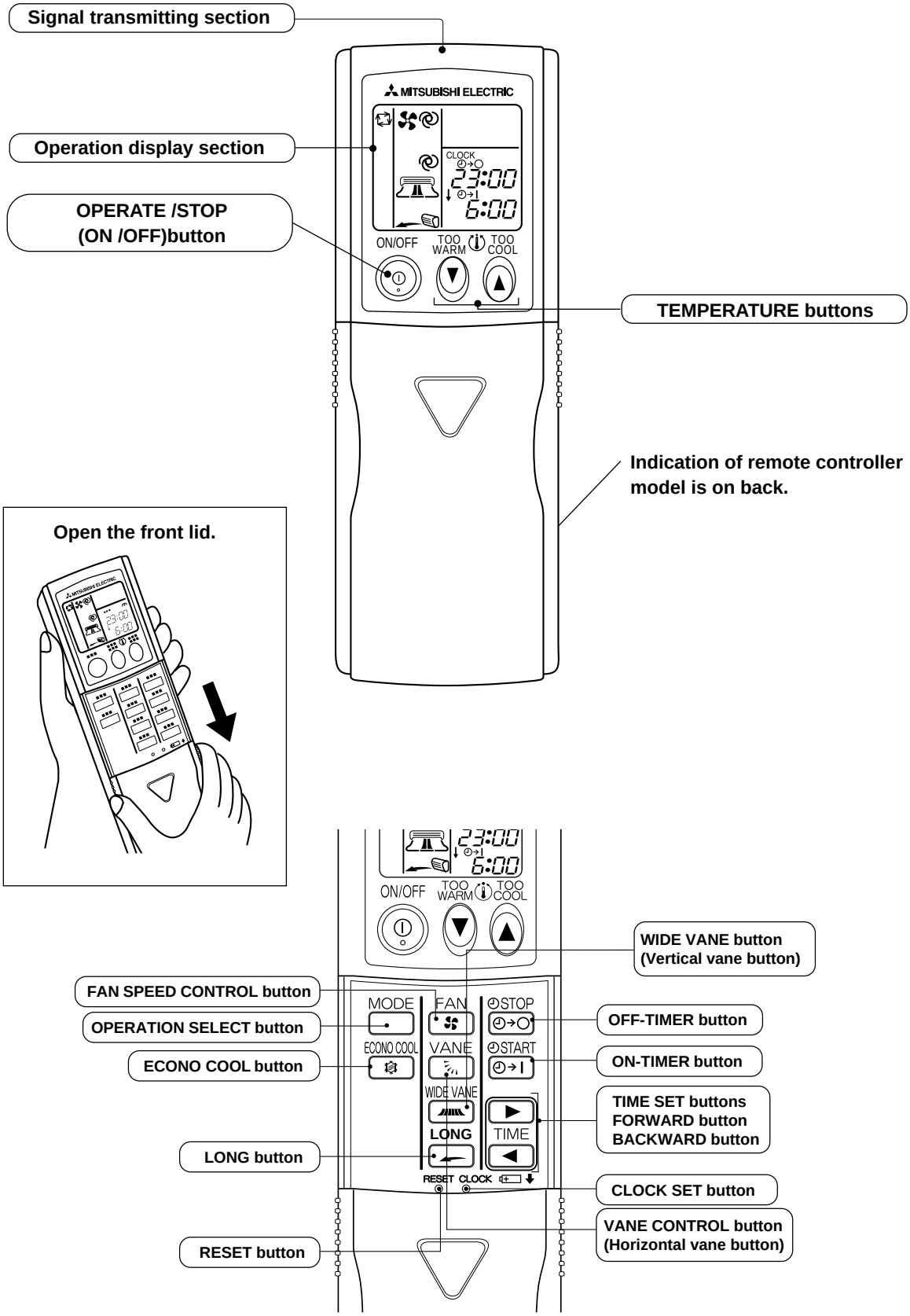

3 SPECIFICATION

Indoor model			MSZ-GA50VA		MSZ-GA60VA	
Function			Cooling	Heating	Cooling	Heating
Power supply			Single phase 230V, 50Hz		Single phase 230V, 50Hz	
Capacity	Air flow(High/Med./Low)	m³ /h	852/690/498		1,032/768/522	1,032/786/522
Electrical data	Power outlet	A	20		20	
	Running current ✻1	A	0.45		0.60	
	Power input ✻1	W	50		60	
	Power factor ✻1	%	48		43	
	Fan motor current ✻1	A	0.45		0.60	
Fan motor	Model		RC0J56-AA		RC0J56-AA	
	Dimensions W×H×D	mm	1,100×325×258		1,100×325×258	
	Weight	kg	16		16	
Special remarks	Air direction		5		5	
	Sound level(High/Med./Low)	dB	48/38/31		54/40/32	
	Fan speed(High/Med./Low)	rpm	1,120/940/720		1,310/1030/750	1,310/1050/750
	Fan speed regulator		3		3	
Remote controller model			KM05C		KM05C	

Indoor model			MSZ-GA71VA	
Function			Cooling	Heating
Power supply			Single phase 230V, 50Hz	
Capacity	Air flow(High/Med./Low)	m³ /h	1,032/798/564	1,032/816/564
Electrical data	Power outlet	A	20	
	Running current ✻1	A	0.60	
	Power input ✻1	W	60	
	Power factor ✻1	%	43	
	Fan motor current ✻1	A	0.60	
Fan motor	Model		RC0J56-AA	
	Dimensions W×H×D	mm	1,100×325×258	
	Weight	kg	16	
Special remarks	Air direction		5	
	Sound level(High/Med./Low)	dB	54/40/33	
	Fan speed(High/Med./Low)	rpm	1,310/1,060/800	1,310/1,080/800
	Fan speed regulator		3	
Remote controller model			KM05C	

NOTE: Test conditions are based on ISO 5151.
Cooling : Indoor Dry-bulb temperature 27°C Wet-bulb temperature 19°C
Outdoor Dry-bulb temperature 35°C Wet-bulb temperature(24°C)
Heating : Indoor Dry-bulb temperature 20°C Wet-bulb temperature 15.5°C
Outdoor Dry-bulb temperature 7°C Wet-bulb temperature 6°C
Indoor-Outdoor piping length 5m
✻1 Measured under rated operating frequency.

Specifications and rating conditions of main electric parts

Fuse	(F11)	T3.15AL 250V
Vane motor	(MV1/ MV2)	MP20/MP20
Varistor	(NR11)	ERZV14D471
Terminal block	(TB)	4P

4 NOISE CRITERIA CURVES

MSZ-GA50VA

FAN SPEED	SPL(dB(A))	LINE
High	48	●——●

Test conditions
Cooling : Dry-bulb temperature 27℃ Wet-bulb temperature 19℃
Heating : Dry-bulb temperature 20℃ Wet-bulb temperature 15.5℃

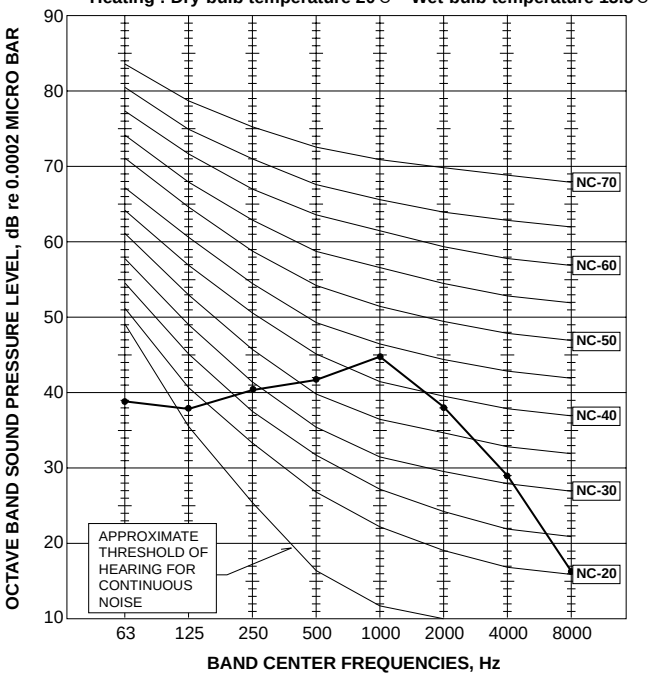

MSZ-GA60VA
MSZ-GA71VA

FAN SPEED	SPL(dB(A))	LINE
High	54	●——●

Test conditions
Cooling : Dry-bulb temperature 27℃ Wet-bulb temperature 19℃
Heating : Dry-bulb temperature 20℃ Wet-bulb temperature 15.5℃

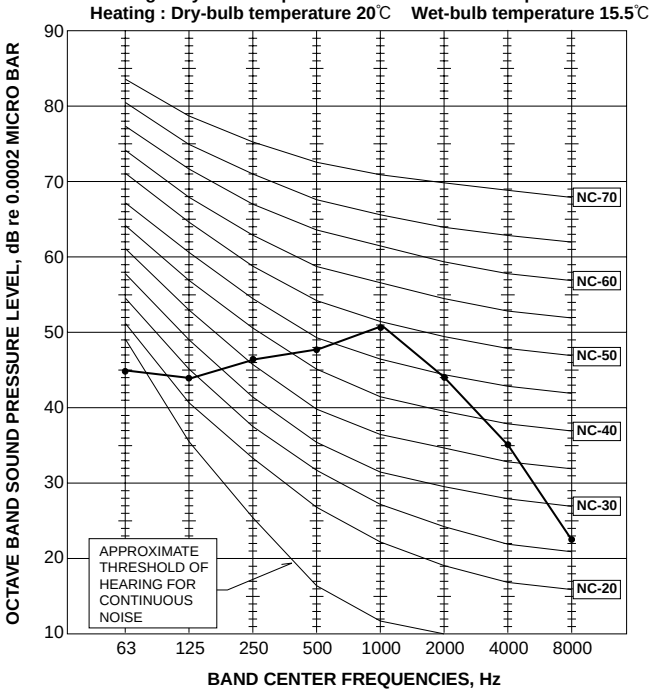

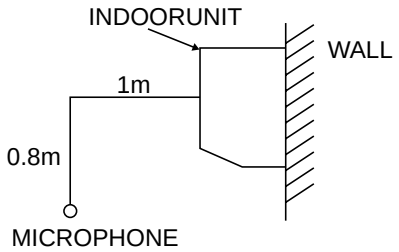

5 OUTLINES AND DIMENSIONS

MSZ-GA50VA
MSZ-GA60VA
MSZ-GA71VA

Unit: mm

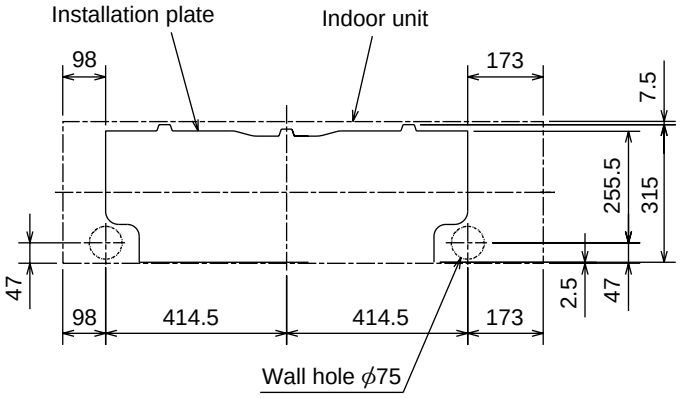

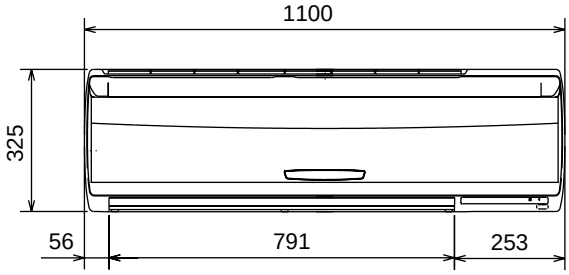

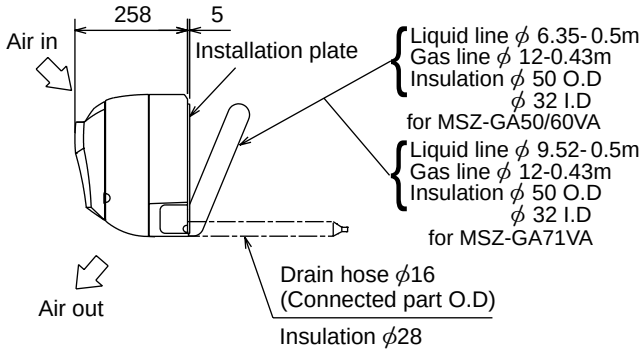

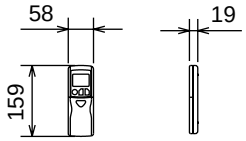

Wireless remote controller

6 WIRING DIAGRAM

MSZ-GA50VA
MSZ-GA60VA
MSZ-GA71VA

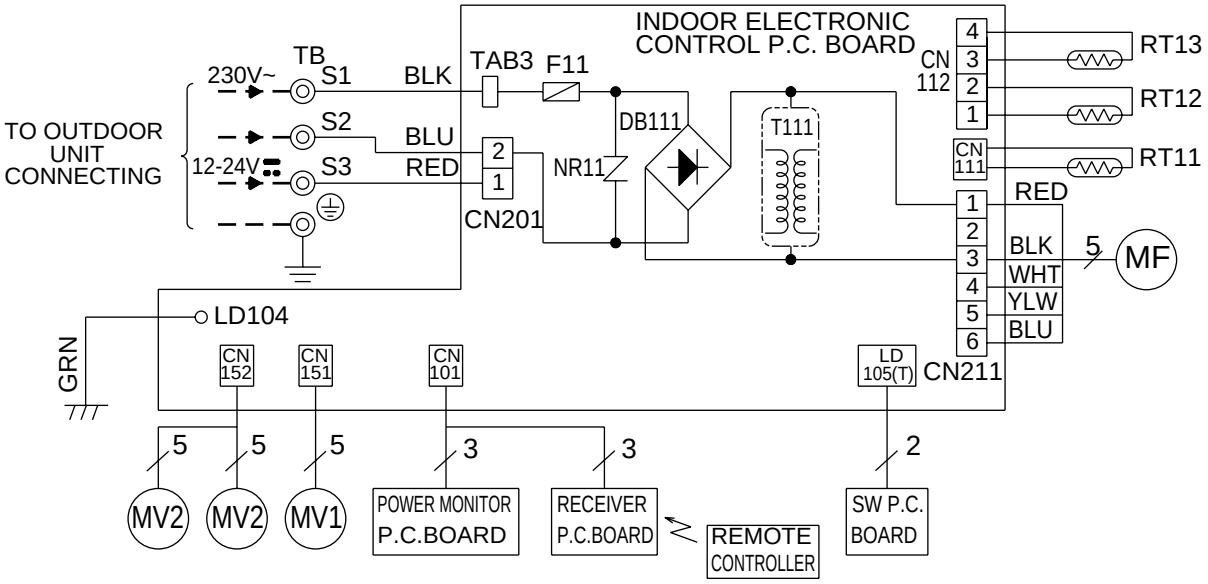

SYMBOL	NAME	SYMBOL	NAME	SYMBOL	NAME
DB111	DIODE STACK	MV2	VANE MOTOR (VERTICAL)	RT13	INDOOR COIL THERMISTOR (SUB)
F11	FUSE (3.15A)	NR11	VARISTOR	T111	TRANSFORMER
MF	INDOOR FAN MOTOR	RT11	ROOM TEMPERATURE THERMISTOR	TB	TERMINAL BLOCK
MV1	VANE MOTOR (HORIZONTAL)	RT12	INDOOR COIL THERMISTOR (MAIN)		

NOTES: 1.About the outdoor side electric wiring refer to the outdoor unit electric wiring diagram for servicing.
2.Use copper conductors only. (For field wiring)
3.Symbols below indicate.
◎ : Terminal block
▭▭▭ : Connector

7 REFRIGERANT SYSTEM DIAGRAM

MSZ-GA50VA

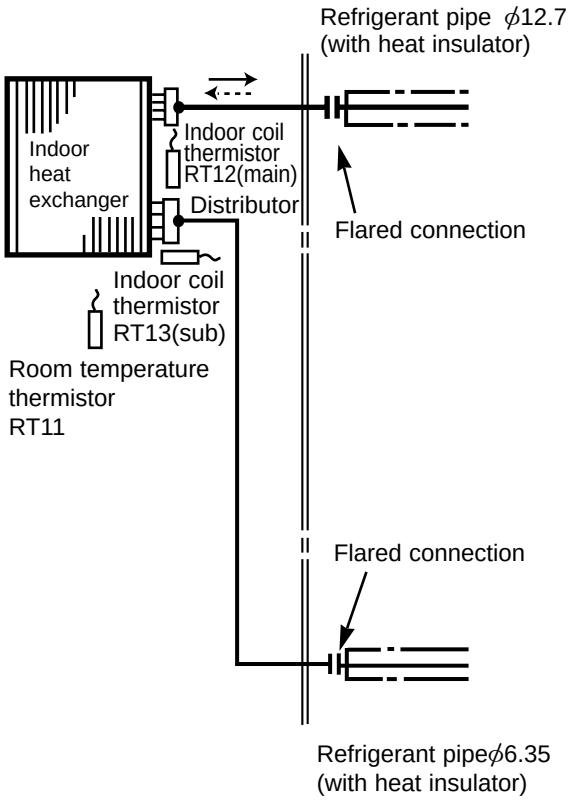

MSZ-GA60VA

Unit:mm

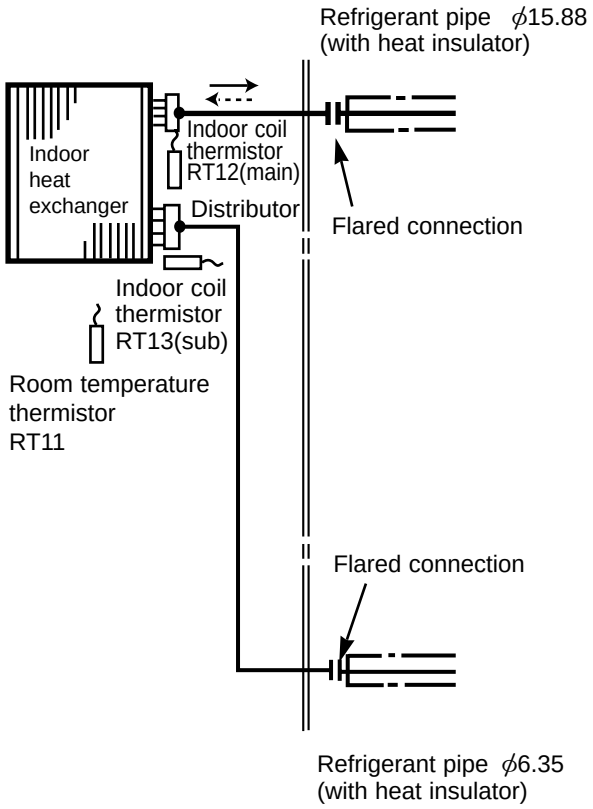

MSZ-GA71VA

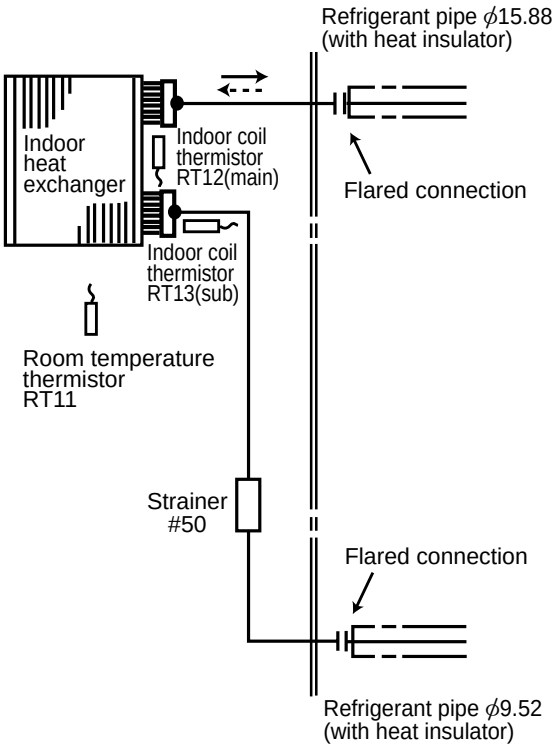

Refrigerant flow in cooling

Refrigerant flow in heating

8 SERVICE FUNCTIONS

MSZ-GA50VA
MSZ-GA60VA
MSZ-GA71VA

8-1. TIMER SHORT MODE

For service, set time can be shortened by short circuit of JPG and JPS on the electronic control P.C. board.
The time will be shortened as follows.
Set time : 1 minute → 1-second
Set time : 3 minute → 3-second (It takes 3 minutes for the compressor to start operation. However, the starting time is shortened by short circuit of JPG and JPS.)

8-2. P.C. BOARD MODIFICATION FOR INDIVIDUAL OPERATION

A maximum of 4 indoor units with wireless remote controllers can be used in a room.
In this case, to operate each indoor unit individually by each remote controller, P.C. boards of remote controller must be modified according to the number of the indoor unit.

How to modify the remote controller P.C. board

Remove batteries before modification.
The board has a print as shown below :

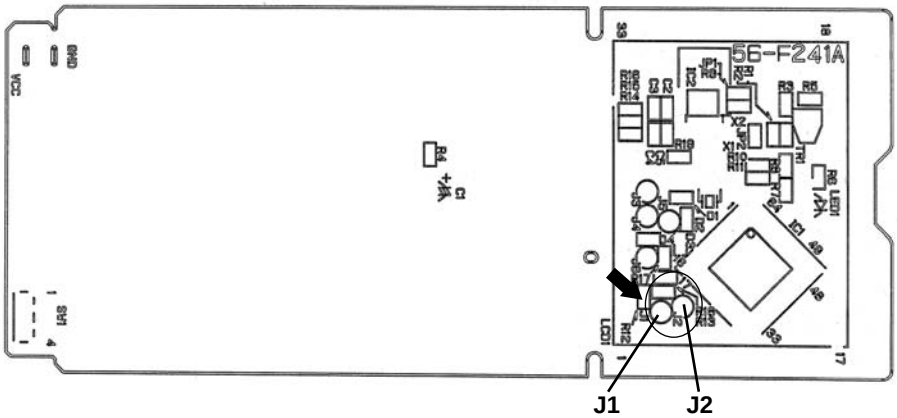

NOTE : For modification, take out the batteries and press the OPERATE/STOP(ON/OFF) button twice or 3 times at first. After finish modification, put back the batteries then press the RESET button.

The P.C. board has the print “J1” and “J2”. Solder “J1” and “J2” according to the number of indoor unit as shown in Table 1. After modification, press the RESET button.

Table 1

	1 unit operation	2 units operation	3 units operation	4 units operation
No. 1 unit	No modification	Same as at left	Same as at left	Same as at left
No. 2 unit	–	Solder J1	Same as at left	Same as at left
No. 3 unit	–	–	Solder J2	Same as at left
No. 4 unit	–	–	–	Solder both J1 and J2

How to set the remote controller exclusively for particular indoor unit

After you turn the breaker ON, the first remote controller that sends the signal to the indoor unit will be regarded as the remote controller for the indoor unit.
The indoor unit will only accepts the signal from the remote controller that has been assigned to the indoor unit once they are set. The setting will be cancelled if the breaker has turned off, or the power supply has shut down.
Please conduct the above setting once again after the power has restored.

8-3. AUTO RESTART FUNCTION

When the indoor unit is controlled with the remote controller, the operation mode, set temperature, and the fan speed are memorized by the indoor electronic control P.C. board. The “AUTO RESTART FUNCTION” sets to work the moment power has restored after power failure. Then, the unit will restart automatically.

Operation

①If the main power has been cut, the operation settings remain.

②After the power is restored, the unit restarts automatically according to the memory.(However, it takes at least 3 minutes for the compressor to start running.)

How to release “AUTO RESTART FUNCTION”

①Turn OFF the main power for the unit.

②Pull out the electronic control P.C. board, the receiver P.C. board and the display P.C.board. (Refer to 10.2.)

③Solder jumper wire to JR07 on the indoor electronic control P.C. board. (Refer to 9-7.)

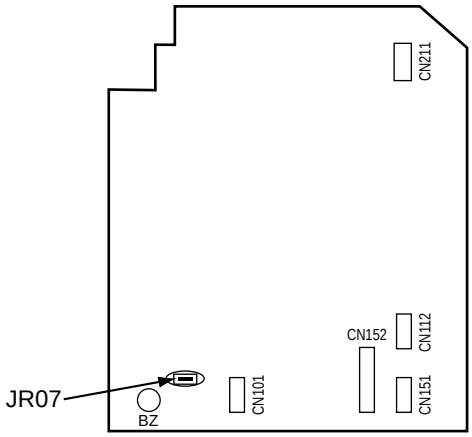

NOTE

- The operation settings are memorized when 10 seconds have passed after the indoor unit was operated with the remote controller.
- If main power is turned OFF or a power failure occurs while AUTO START/STOP timer is active ,the timer setting is cancelled.
- If the unit has been off with the remote controller before power failure, the auto restart function does not work as the power button of the remote controller is off.
- To prevent breaker off due to the rush of starting current, systematize other home appliances not to turn ON at the same time.
- When some air conditioners are connected to the same supply system, if they are operated before power failure, the starting current of all the compressors may flow simultaneously at restart.
  Therefore, the special counter-measures are required to prevent the main voltage-drop or the rush of the starting current by adding to the system that allows the units to start one by one.

9 TROUBLESHOOTING

MSZ-GA50VA
MSZ-GA60VA
MSZ-GA71VA

9-1. Cautions on troubleshooting

1. Before troubleshooting, check the following:

(1) Check the power supply voltage.
(2) Check the indoor/outdoor connecting wire for mis-wiring.

2. Take care of the following during servicing

(1) Before servicing the air conditioner, be sure to turn OFF the main unit first with the remote controller, and then after confirming the horizontal vane is closed, turn OFF the breaker and / or disconnect the power plug.
(2) Be sure to turn OFF the power supply before removing the front panel, the cabinet, the top panel, and the electronic control P.C. board.
(3) When removing the electronic control P.C. board, hold the edge of the board with care NOT to apply stress on the components.
(4) When connecting or disconnecting the connectors, hold the housing of the connector. DO NOT pull the lead wires.

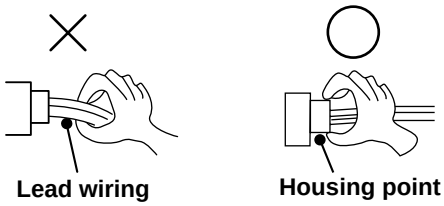

3. Troubleshooting procedure

(1) First, check if OPERATION INDICATOR lamp on the indoor unit is flashing on and off to indicate an abnormality. To make sure, check how many times the abnormality indication is flashing on and off before starting service work.
(2) Before servicing, check that the connector and terminal are connected properly.
(3) If the electronic control P.C. board is supposed to be defective, check the copper foil pattern for disconnection and the components for bursting and discolouration.
(4) When troubleshooting, refer to 9-2., 9-3. and 9-4.

4. How to replace batteries

Weak batteries may cause the remote controller malfunction.
In this case, replace the batteries to operate the remote controller normally.

① Remove the front lid and insert batteries. Then reattach the front lid.

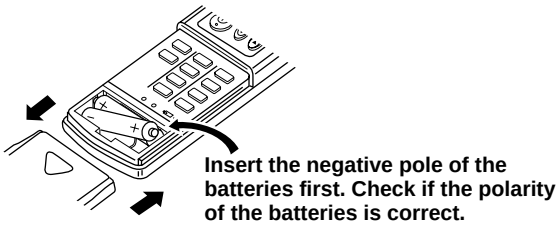

② Press the RESET button with tip end of ball point pen or the like, and then use the remote controller.

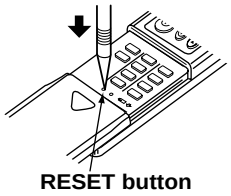

NOTE : If the RESET button is not pressed, the remote controller may not operate correctly.

INFORMATION FOR MULTI SYSTEM AIR CONDITIONER
OUTDOOR UNIT : MXZ series

Multi system air conditioner can connect two or more indoor units with one outdoor unit.

- Unit won't operate in case the total capacity of indoor units exceeds the capacity of outdoor units. Do not connect indoor units beyond the outdoor unit capacity.
- When you try to operate two or more indoor units with one outdoor unit simultaneously, one for the cooling and the other for heating, the operation mode of the indoor unit that operates earlier is selected. The other indoor units cannot operate, indicating as shown in the figure below. In this case, please set all the indoor units to the same operation mode.

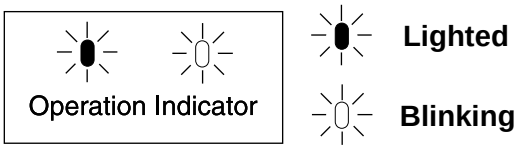

- When indoor units starts the operation while the defrosting of outdoor unit is being done, it takes a few minutes (max. 10 minutes) to blow out the warm air.
- In the heating operation, though indoor unit that does not operate may get warm or the sound of refrigerant flowing may be heard, they are not malfunction. The reason is that the refrigerant continuously flows into it.

9-2. Failure mode recall function

Outline of the function

This air conditioner can memorize the abnormal condition which has occurred once.

Even though LED indication listed on the troubleshooting check table (9-4.) disappears, the memorized failure details can be recalled.

This mode is very useful when the unit needs to be repaired for the abnormality which doesn't recur.

1. Flow chart of failure mode recall function for the indoor/outdoor unit

Operational procedure

The cause of abnormality cannot be found because the abnormality doesn't recur.

Setting up the failure mode recall function

Turn ON the power supply.
<Preparation of the remote controller>
① While pressing both OPERATION SELECT button and TOO COOL button on the remote controller at the same time, press RESET button.
② First, release RESET button.
And release the other two buttons after all LCD except the set temperature in operation display section of the remote controller is displayed after 3 seconds.

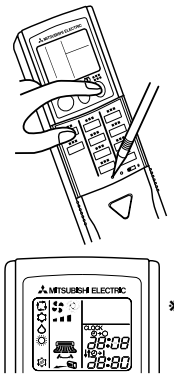

※1. Regardless of normal or abnormal condition, a short beep is emitted once the signal is received.

Press OPERATE/STOP(ON/OFF) button of the remote controller (the set temperature is displayed) with the remote controller headed towards the indoor unit. ※1

Does the left lamp of OPERATION INDICATOR lamp on the indoor unit blink at the interval of 0.5 seconds?
Blinks: Either indoor or outdoor unit is abnormal.
Beep is emitted at the same timing as the blinking of the left lamp of OPERATION INDICATOR lamp. ※2

No (OFF) → Indoor unit is normal.
But the outdoor unit might be abnormal because there are some abnormalities that can't be recalled with this way.
Confirm if outdoor unit is abnormal according to the detailed outdoor unit failure mode recall function.

Yes (Blinks)

Judgment of indoor/outdoor abnormality

Before blinking, does the left lamp of OPERATION INDICATOR lamp stay ON for 3 seconds?
Stays ON for 3 seconds (without beep): The outdoor unit is abnormal.

Yes → The outdoor unit is abnormal.
Check the blinking pattern, and confirm the abnormal point with the outdoor unit failure mode table (Refer to outdoor unit service manual.)
Make sure to check at least two consecutive blinking cycles. ※3

No → The indoor unit is abnormal.
Check the blinking pattern, and confirm the abnormal point with the indoor unit failure mode table(9-2.2.).
Make sure to check at least two consecutive blinking cycles. ※2

Releasing the failure mode recall function

Release the failure mode recall function by the following procedures.
Turn OFF the power supply and turn it ON again.
Press RESET button of the remote controller.

Repair the defective parts.

Deleting the memorized abnormal condition

①After repairing the unit, recall the failure mode again according to "Setting up the failure mode recall function" mentioned above.
②Press OPERATE/STOP(ON/OFF) button of the remote controller (the set temperature is displayed) with the remote controller headed towards the indoor unit.
③Press EMERGENCY OPERATION switch so that the memorized abnormal condition is deleted.
④Release the failure mode recall function according to "Releasing the failure mode recall function" mentioned above.

Note1.Make sure to release the failure mode recall function once it's set up, otherwise the unit cannot operate properly.
2.If the abnormal condition is not deleted from the memory, the last abnormal condition is kept memorized.

※2. Blinking pattern when the indoor unit is abnormal:

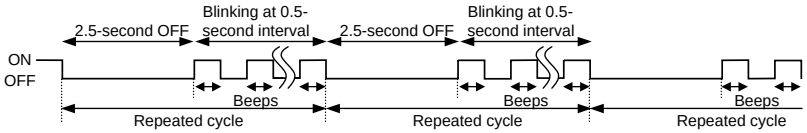

※3.Blinking pattern when the outdoor unit is abnormal:

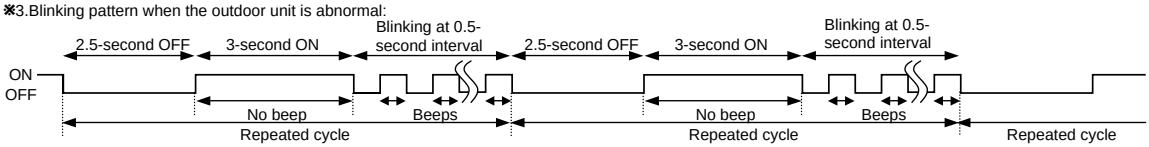

2. Indoor unit failure mode table

Left lamp of OPERATION INDICATOR lamp	Abnormal point (Failure mode)	Condition	Correspondence
Not lighted	Normal	–	–
1-time flash every 0.5-second	Room temperature thermistor	When the room temperature thermistor short or open circuit is detected every 8 seconds during operation.	Refer to the characteristics of the room temperature thermistor (9-7.).
2-time flash 2.5-second OFF	Indoor coil thermistor	When the indoor coil thermistor short or open circuit is detected every 8 seconds during operation.	Refer to the characteristics of the main indoor coil thermistor, the sub indoor coil thermistor (9-7.).
3-time flash 2.5-second OFF	Serial signal	When the serial signal from the outdoor unit is not received for a maximum of 6 minutes.	Refer to 9-6.Ⓓ "How to check mis-wiring and serial signal error".
11-time flash 2.5-second OFF	Indoor fan motor	When the rotational frequency feedback signal is not emitted during the 12-seconds indoor fan operation.	Refer to 9-6.Ⓐ "Check of indoor fan motor".
12-time flash 2.5-second OFF	Indoor control system	When it cannot properly read data in the nonvolatile memory of the indoor electronic control P.C. board.	Replace the indoor electronic control P.C. board.

NOTE : Blinking patterns of this mode differ from the ones of Troubleshooting check table (9-4.).

9-3. Instruction of troubleshooting

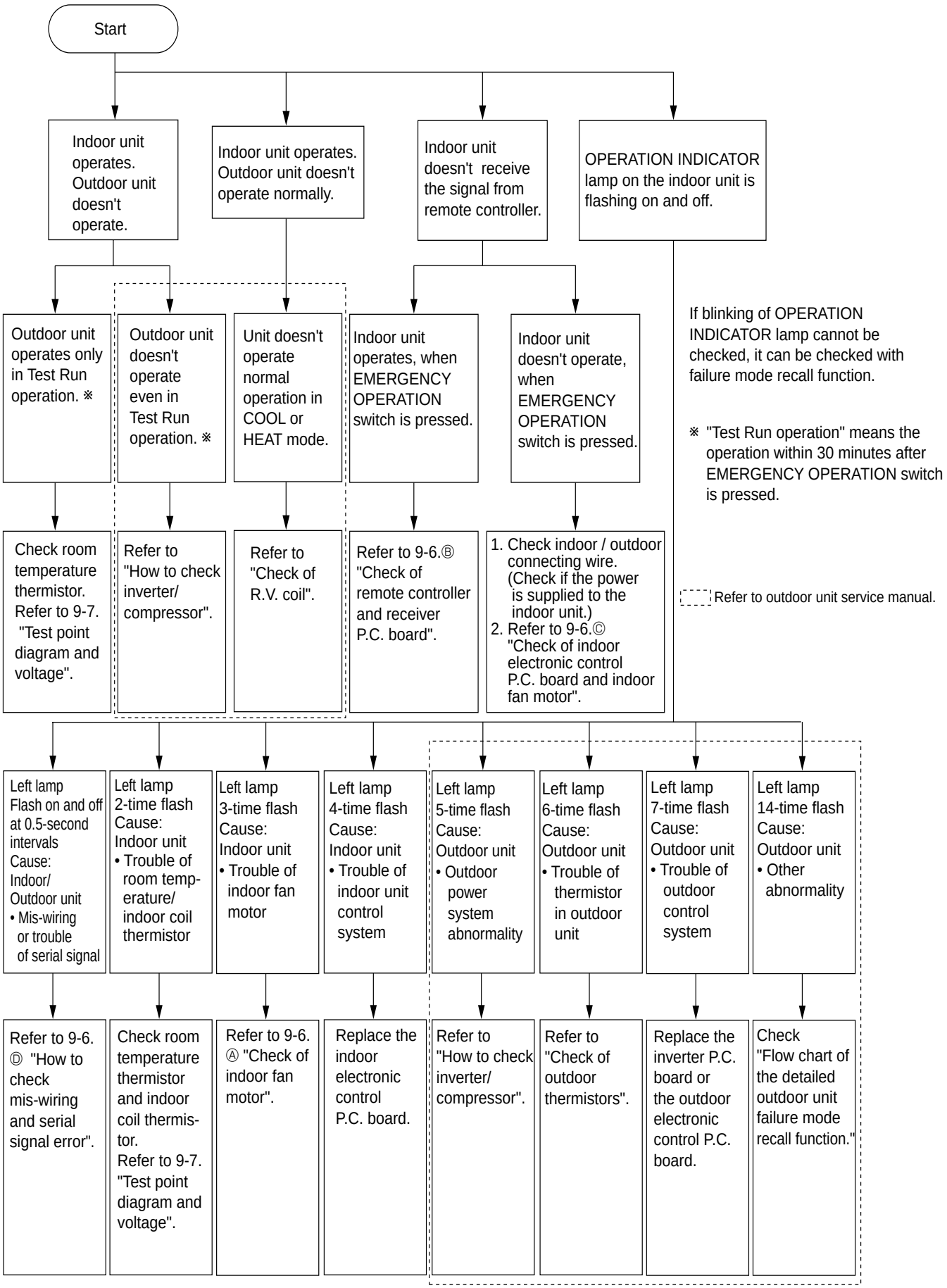

9-4. Troubleshooting check table

Before taking measures, make sure that the symptom reappears for accurate troubleshooting.
When the indoor unit has started operation and the following detection method has detected an abnormality (the first detection after the power ON), the indoor electronic control P.C. board turns OFF the indoor fan motor with OPERATION INDICATOR lamp flashing.

Operation Indicator

Lighted

Blinking

Not Lighted

· Flashing of OPERATION INDICATOR lamp (left-hand side lamp) indicates abnormalities.

No.	Abnormal point	Operation indicator lamp	Symptom	Condition	Correspondence
1	Mis-Wiring or serial signal	Left lamp flashes. 0.5-second ON 0.5-second OFF	Indoor unit and outdoor unit do not operate.	When serial signal from outdoor unit is not received for a maximum of 6 minutes.	• Refer to 9-6.Ⓓ "How to check mis-wiring and serial signal error".
2	Indoor coil thermistor Room tempera-ture thermistor	Left lamp flashes. 2-time flash 2.5-second OFF	Indoor unit and outdoor unit do not operate.	When the indoor coil or room temperature thermistor is short or open circuit.	• Refer to 9-7.the characteristics of indoor coil thermistor, and the room temperature thermistor.
3	Indoor fan motor	Left lamp flashes. 3-time flash 2.5-second OFF	Indoor unit and outdoor unit do not operate.	When rotational frequency feedback signal is not emit during indoor fan operation.	• Refer to 9-6.Ⓐ "Check of indoor fan motor".
4	Indoor control system	Left lamp flashes. 4-time flash 2.5-second OFF	Indoor unit and outdoor unit do not operate.	When it cannot properly read data in the nonvolatile memory of indoor electronic control P.C. board.	• Replace the indoor electronic control P.C. board.
5	Outdoor power system	Left lamp flashes. 5-time flash 2.5-second OFF	Indoor unit and outdoor unit do not operate.	When it consecutively occurs 3 times that the compressor stops for overcurrent protection or start-up failure protection witth in 1 minute after start-up.	• Refer to "How to check of inverter/compressor". Refer to outdoor unit service manual . • Check the stop valve.
6	Outdoor thermistors	Left lamp flashes. 6-time flash 2.5-second OFF	Indoor unit and outdoor unit do not operate.	Outdoor thermistors short or open circuit during compressor operation.	• Refer to "Check of outdoor thermistor". Refer to outdoor unit service manual.
7	Outdoor control system	Left lamp flashes. 7-time flash 2.5-second OFF	Indoor unit and outdoor unit do not operate.	When it cannot properly read data in the nonvolatile memory of the inverter P.C. board or the outdoor electronic control P.C. board.	• Replace the inverter P.C. board or the outdoor electronic control P.C. board. Refer to outdoor unit service manual.
8	Other abnormality	Left lamp flashes. 14-time flash 2.5-second OFF	Indoor unit and outdoor unit do not operate.	An abnormality other than above mentioned is detected.	• Confirm the abnormality in detail using the failure mode recall function for outdoor unit.

Operation Indicator

Lighted

Blinking

Not Lighted

· Flashing of OPERATION INDICATOR lamp (right-hand side lamp) indicates abnormality.
· OPERATION INDICATOR lamp (left-hand side lamp) is lighted.

No.	Abnormal point	Operation indicator lamp	Symptom	Condition	Correspondence
1	**MXZ type** Operation mode setting	Right lamp flash 2.5-second OFF	Outdoor unit operates but indoor unit does not operate.	When the operation mode of each indoor unit is differently set to COOL(includes DRY) and HEAT at the same time, the operation mode of indoor unit that has operated at first has the priority.	• Unify the operation mode. Refer to outdoor unit service manual.

9-5. Trouble criterion of main parts

MSZ-GA50VA MSZ-GA60VA MSZ-GA71VA

Part name	Check method and criterion	Figure
Room temperature thermistor(RT11) Indoor coil thermistor (RT12(MAIN), RT13(SUB))	Measure the resistance with a tester. Refer to 9-7. "Test point diagram and voltage", "Indoor electronic control P.C. board", the chart of thermistor.	
Indoor fan motor(MF)	Check 9-6. Ⓐ.	
Horizontal vane motor(MV1) Vertical vane motor(MV2)	Measure the resistance between the terminals with a tester. (Part temperature 10°C ~ 30°C) Color of the lead wire: Normal BRN-other one: 282 Ω ~ 306 Ω	RED, ROTOR, YLW, BRN, ORN, GRN

9-6. Troubleshooting flow

When OPERATION INDICATOR lamp flashes 3-time.
Indoor fan does not operate.

Ⓐ Check of indoor fan motor

The indoor fan motor error has occurred, and the indoor fan doesn't operate.

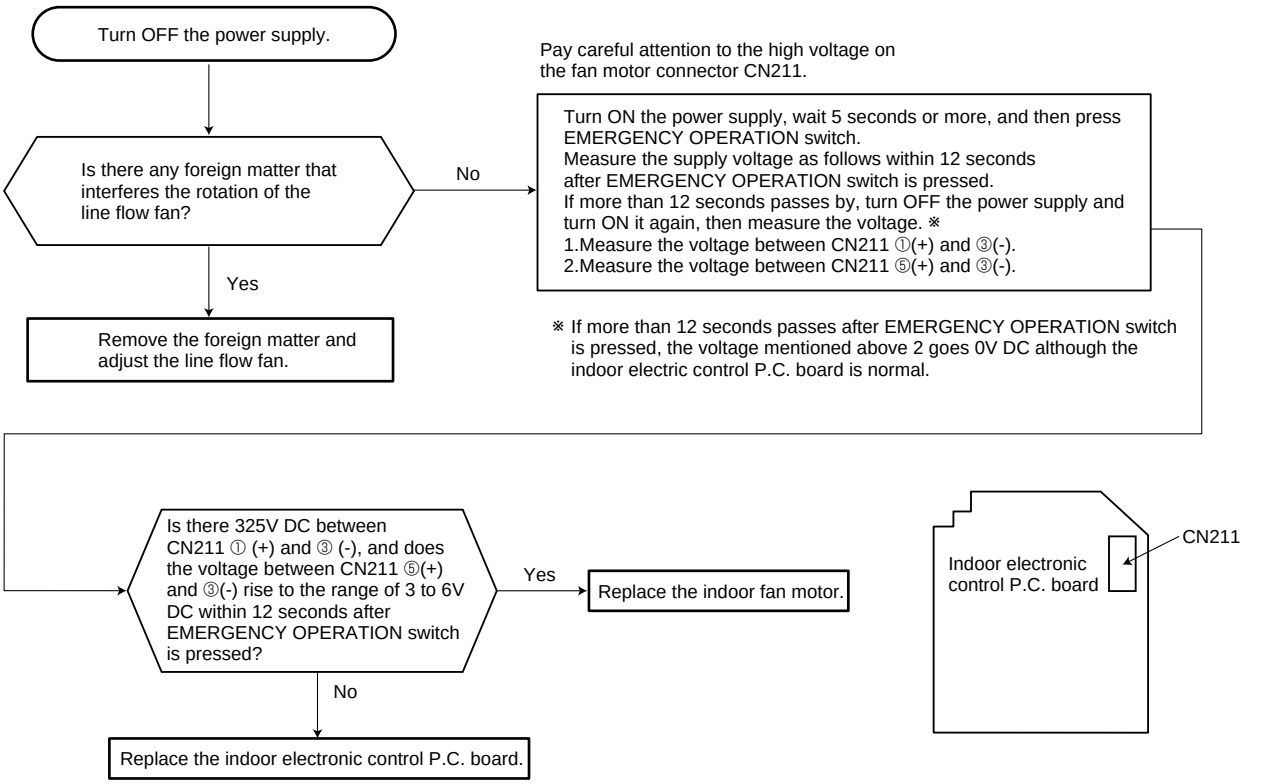

The indoor fan motor error has occurred, and the indoor fan repeats "12-second ON and 30-second OFF" 3 times, and then stops.

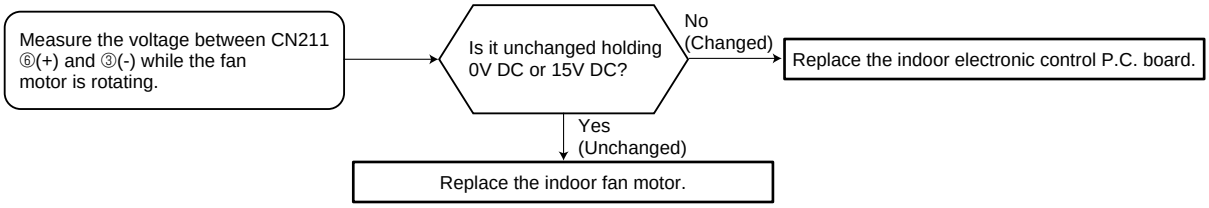

Indoor unit operates by pressing EMERGENCY OPERATION switch, but does not operate with the remote controller.

Ⓑ Check of remote controller and receiver P.C. board

※Check if the remote controller is exclusive for this air conditioner.

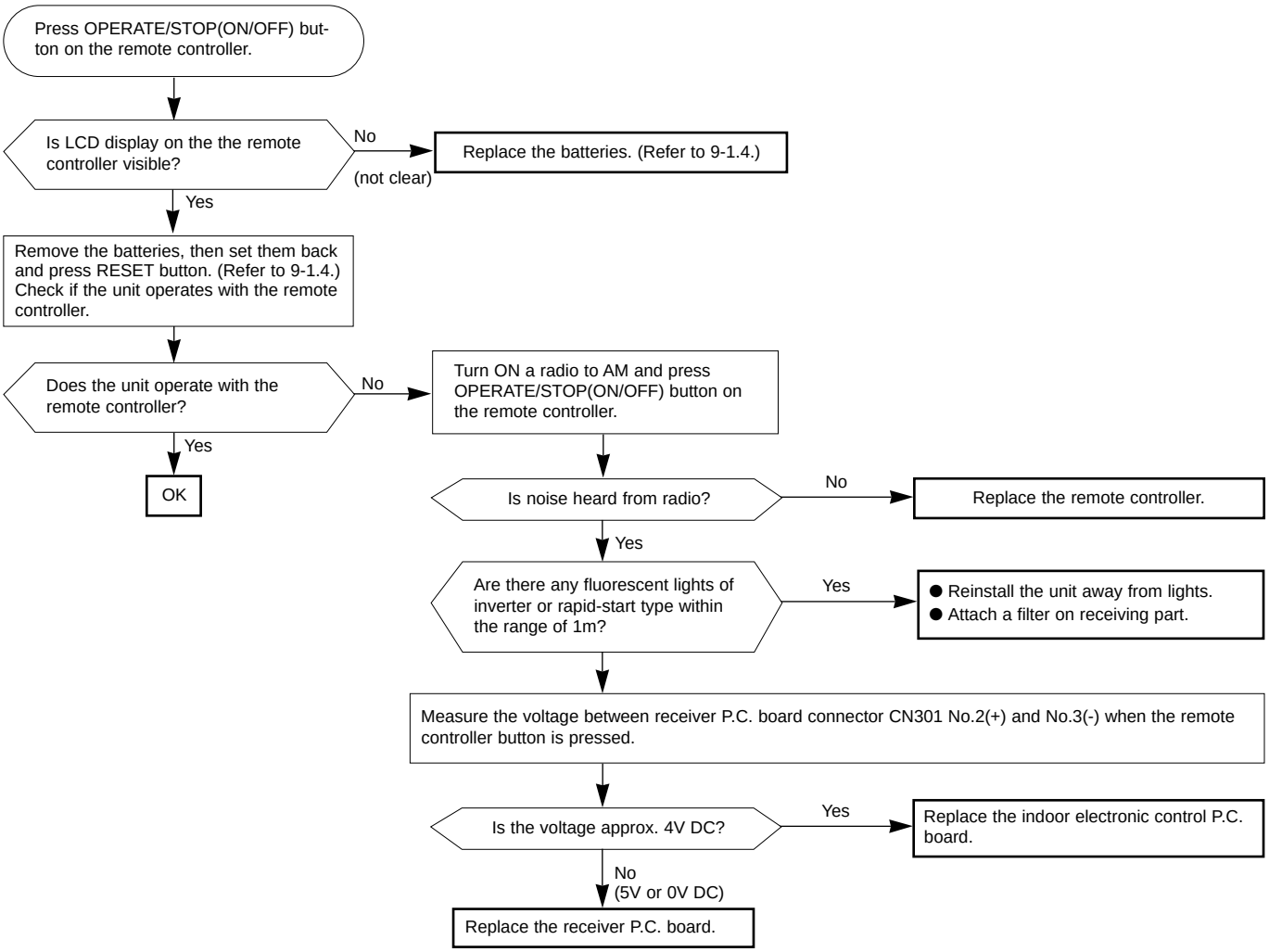

The unit does not operate with the remote controller.
Also, OPERATION INDICATOR lamp does not light up by pressing EMERGENCY OPERATION switch.

ⒸCheck of indoor electronic control P.C. board and indoor fan motor

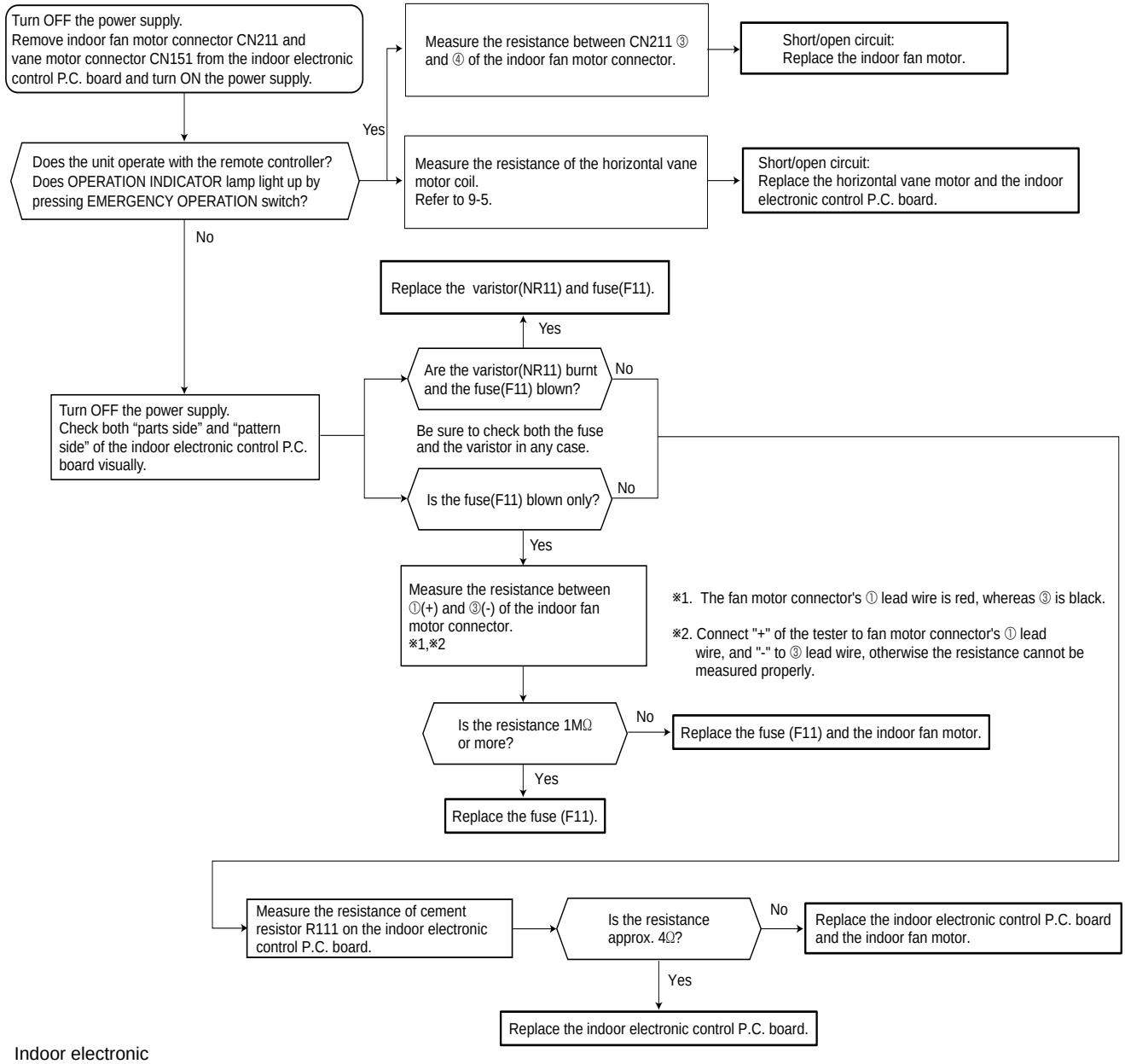

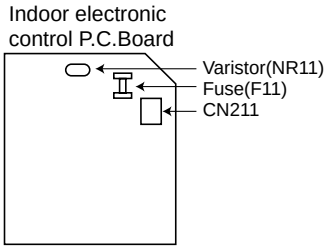

- **When unit cannot operate neither by the remote controller nor by EMERGENCY OPERATION switch. Indoor unit does not operate.**
- **When OPERATION INDICATOR lamp flashes ON and OFF in every 0.5-second. Outdoor unit does not operate.**

Ⓓ How to check mis-wiring and serial signal error (when outdoor unit does not work)

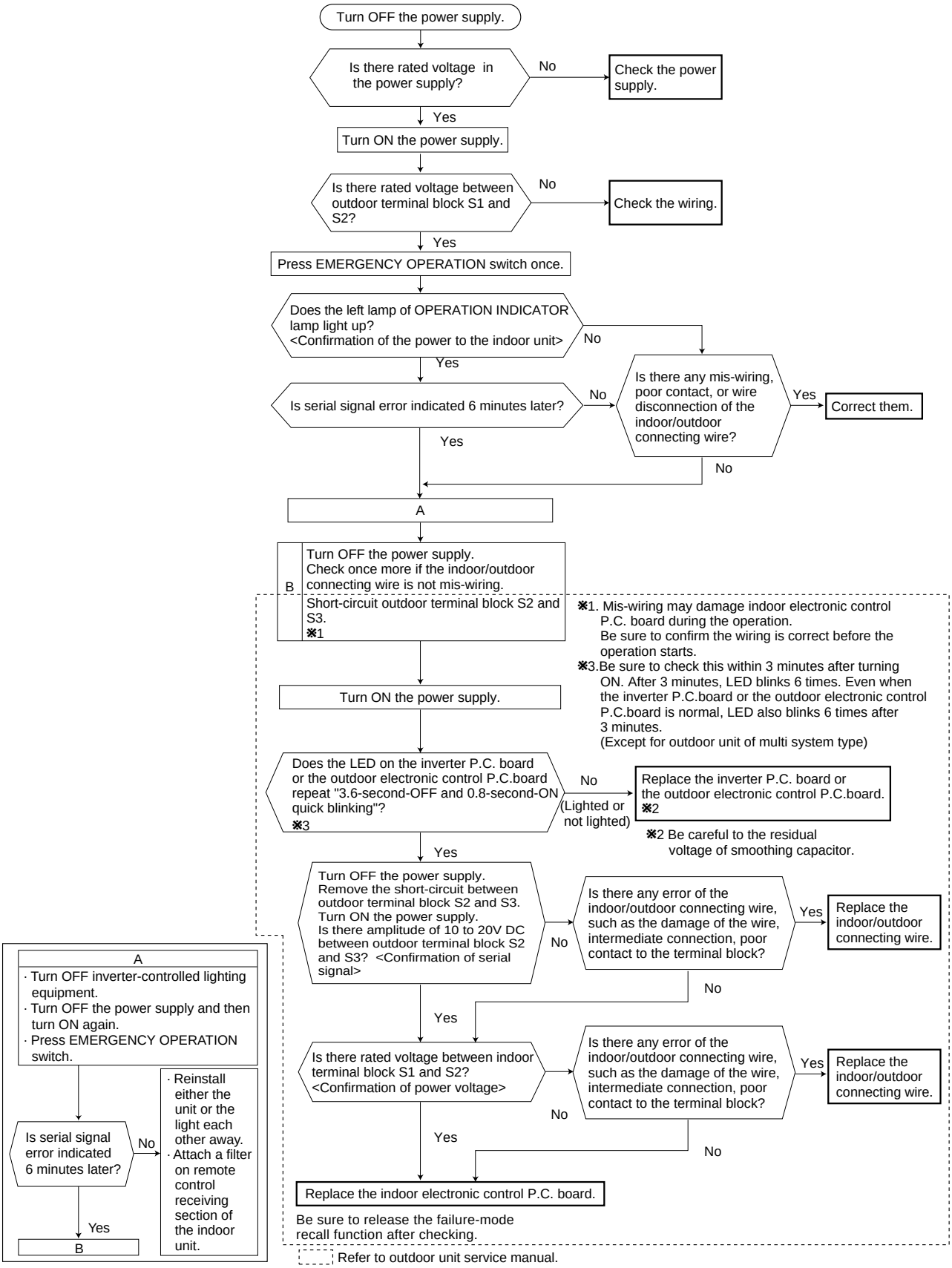

Ⓔ Electromagnetic noise enters into TV sets or radios

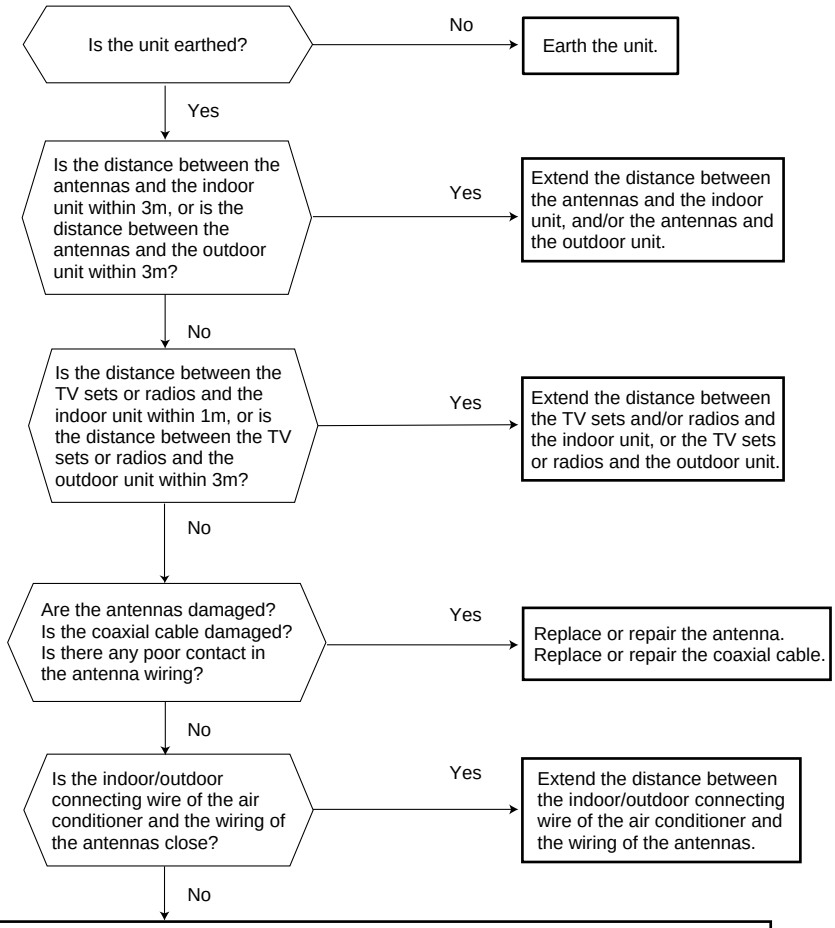

Even if all of the above conditions is fulfilled, the electromagnetic noise may enter, depending on the electric field strength or the installation condition (combination of specific conditions such as antennas or wiring).
Check the followings before asking for service.

1. Devices affected by the electromagnetic noise
   TV sets, radios (FM/AM broadcast, shortwave)
2. Channel, frequency, broadcast station affected by the electromagnetic noise
3. Channel, frequency, broadcast station unaffected by the electromagnetic noise
4. Layout of ;
   indoor/outdoor unit of the air conditioner, indoor/outdoor wiring, grounding wire, antennas, wiring from antennas, receiver
5. Electric field intensity of the broadcast station affected by the electromagnetic noise
6. Presence or absence of amplifier such as booster
7. Operation condition of air conditioner when the electromagnetic noise enters in.
   1) Turn OFF the power supply once, and then turn ON the power supply. In this situation check for the electromagnetic noise.
   2) Within 3 minutes after turning ON the power supply, press OPERATE/STOP (ON/OFF) button on the remote controller for power ON, and check for the electromagnetic noise.
   3) After a short time (3 minutes later after turning ON), the outdoor unit starts running. During operation, check for the electromagnetic noise.
   4) Press OPERATE/STOP (ON/OFF) button on the remote controller for power OFF, when the outdoor unit stops but the indoor/outdoor communication still runs on. In this situation check for the electromagnetic noise.

After checking the above, consult the service representative.

9-7. Test point diagram and voltage

MSZ-GA50VA MSZ-GA60VA MSZ-GA71VA

Indoor electronic control P.C. board

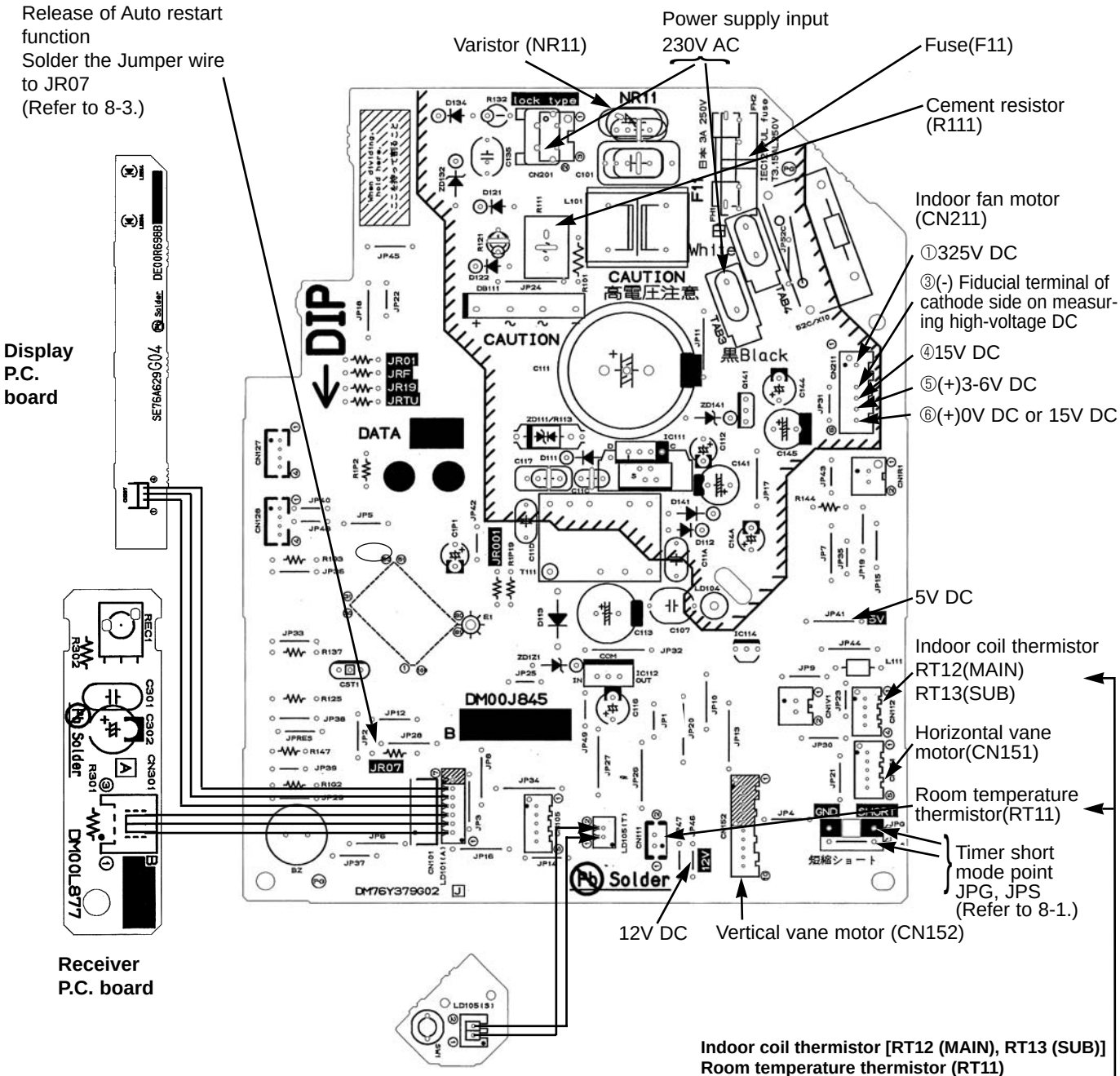

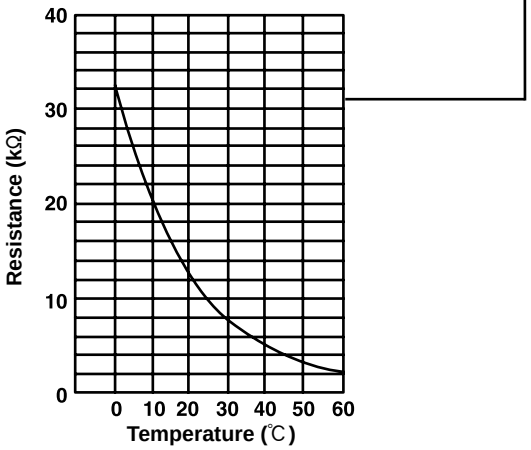

10 DISASSEMBLY INSTRUCTIONS

<"Terminal with locking mechanism" Detaching points>

The terminal which has the locking mechanism can be detached as shown below.
There are two types (Refer to (1) and (2)) of the terminal with locking mechanism.
The terminal without locking mechanism can be detached by pulling it out.
Check the shape of the terminal before detaching.

(1) Slide the sleeve and check if there is a locking lever or not.

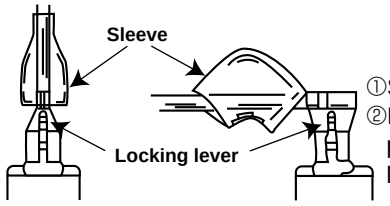

①Slide the sleeve.
②Pull the terminal while pushing the locking lever.

(2) The terminal with this connector has the locking mechanism.

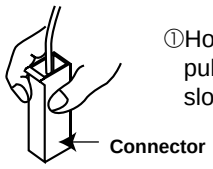

①Hold the sleeve, and pull out the terminal slowly.

MSZ-GA50VA MSZ-GA60VA MSZ-GA71VA

OPERATING PROCEDURE	PHOTOS
1. Removing the front panel (1) Remove the screw caps of the front panel. Remove the screws. (2) Pull the panel down to your side slightly and unhook the catches at the top.	**Photo 1** 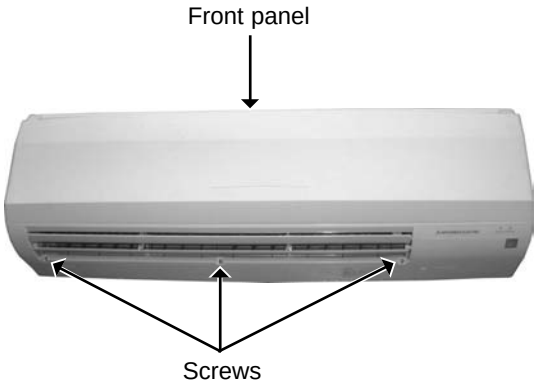
2. Removing the electronic control P.C. board, the receiver P.C. board and the display P.C. board (1) Remove the front panel. (Refer to 1.) (2) Remove the screw of the electrical cover. Remove the electrical cover. (3) Remove the screws of the cable clamp. Remove the cable clamp. (4) Remove the screw of the earth wires, which is solder-mounted to the electronic control P.C. board and connected to the terminal block. (5) While pulling the electronic control P.C. board forward little by little, disconnect all the connectors from the board. (6) Remove the R.L holder. (7) Remove the electronic control P.C. board. (8) Open the R.L holder, remove the receiver P.C. board and the display P.C. board.	**Photo 2** 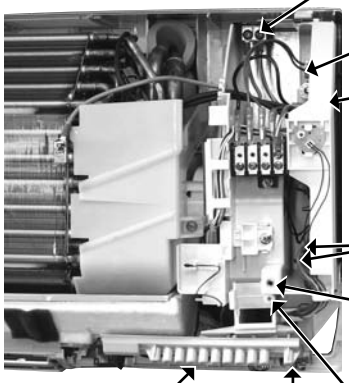

OPERATING PROCEDURE	PHOTOS
3. Removing the electrical box (1) Remove the front panel. (Refer to 1.) (2) Remove the electrical cover. (Refer to 2.) (3) Disconnect the connector of the indoor coil thermistors. (4) Disconnect the motor connector (CN211) and the vane motor connector (CN151 and CN152) on the electronic control P.C. board. (5) Remove the screw of earth wire to the heat exchanger. (6) Remove the fan motor lead wire and indoor coil thermistor from the electrical box. (7) Remove the lead wire of vane motor from the bottom of electrical box. (8) Remove the screw fixing the electrical box and remove the electrical box.	**Photo 3** 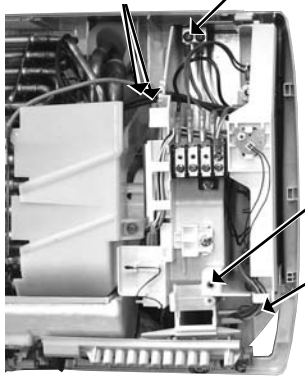
4. Removing the vane motor (1) Remove the front panel. (Refer to 1.) (2) Remove the electrical cover. (Refer to 2.) (3) Remove the lead wire of vane motor.(Refer to 3.) (4) Remove the R.L. holder. (5) Pull out the drain hose from the nozzle assembly and remove the nozzle assembly. (6) Remove the screws of the vane motor and disconnect the connector. (7) Remove the vane motor. **Photo 5** 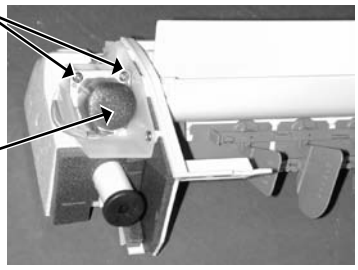 	**Photo 4** 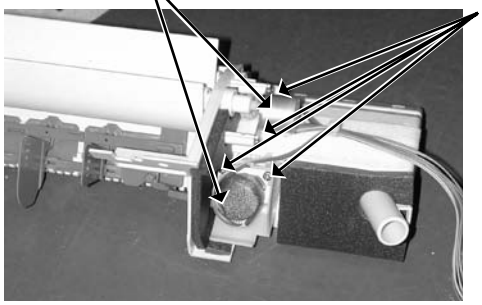
5. Removing the line flow fan and the indoor fan motor (1) Remove the front panel. (Refer to 1.) (2) Remove the electrical box. (Refer to 3.) (3) Pull out the drain hose from the nozzle assembly and remove the nozzle assembly. (4) Remove the water cut. (5) Slide the hole cover and remove the hole cover. (6) Remove the hexagon socket set screw from the line flow fan. (7) Remove the screws fixing the motor bed and remove the fan motor. (Be careful not to drop the fan motor because it is heavy.) (8) Remove the screws fixing the left side of the heat exchanger. (9) Lift the left side of the heat exchanger. (10) Remove the line flow fan. **Photo 8** 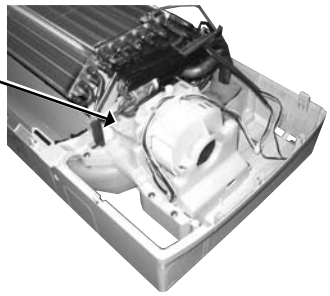 	**Photo 6** 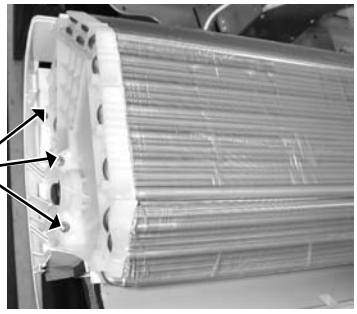 **Photo 7** 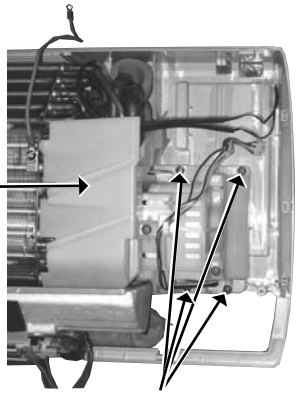

11 PARTS LIST (non-RoHS compliant)

MSZ-GA50VA
MSZ-GA60VA
MSZ-GA71VA

11-1. INDOOR UNIT STRUCTURAL PARTS **11-2. INDOOR UNIT HEAT EXCHANGER**

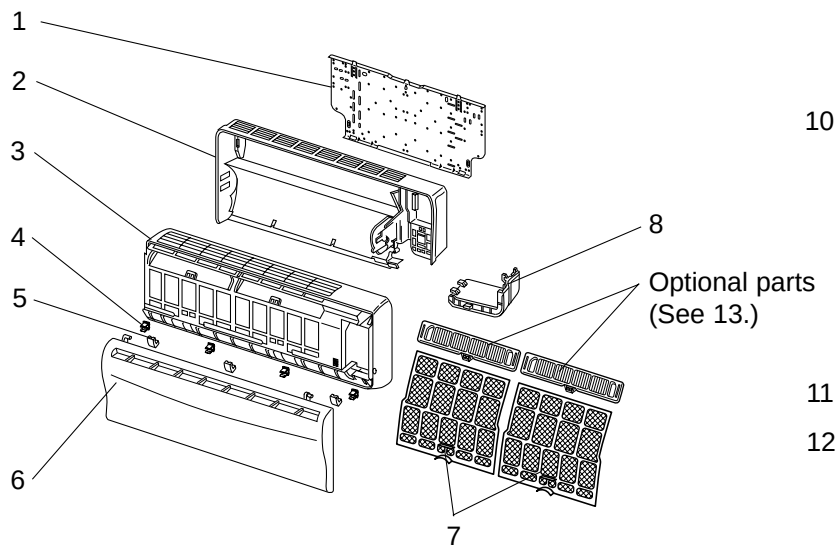

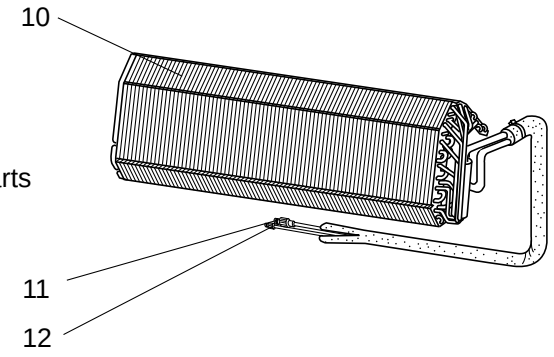

11-1. INDOOR UNIT STRUCTURAL PARTS

Part number that is circled is not shown in the illustration.

No.	Part No.	Part Name	Symbol in Wiring Diagram	Q'ty/unit MSZ-GA50 VA - E1	MSZ-GA60 VA - E1	MSZ-GA71 VA - E1	Remarks
1	E02 527 970	INSTALLATION PLATE		1	1	1	
2	E02 685 234	BOX		1	1	1	
3	E02 888 000	FRONT PANEL ASSEMBLY		1	1	1	Including No.4,5,6
4	E02 408 142	CATCH		4	4	4	4PCS/ SET
5	E02 685 067	SCREW CAP		3	3	3	3PCS/ SET
6	E02 888 010	GRILLE		1	1	1	
7	E02 534 100	CATECHIN AIR FILTER		2	2	2	
8	E02 685 975	CORNER BOX RIGHT		1	1	1	
9	E02 918 007	LAMP PANEL		1	1	1	

11-2. INDOOR UNIT HEAT EXCHANGER

10	E02 851 620	INDOOR HEAT EXCHANGER		1	1		
	E02 819 620	INDOOR HEAT EXCHANGER				1	
11	E02 179 667	UNION (GAS)		1			ϕ12.7
	E02 138 666	UNION (GAS)			1	1	ϕ15.88
12	E02 151 667	UNION (LIQUID)		1	1		ϕ6.35
	E02 527 667	UNION (LIQUID)				1	ϕ9.52

PARTS LIST (non-RoHS compliant)

MSZ-GA50VA
MSZ-GA60VA
MSZ-GA71VA

11-3. INDOOR UNIT FUNCTIONAL PARTS AND ELECTRICAL PARTS

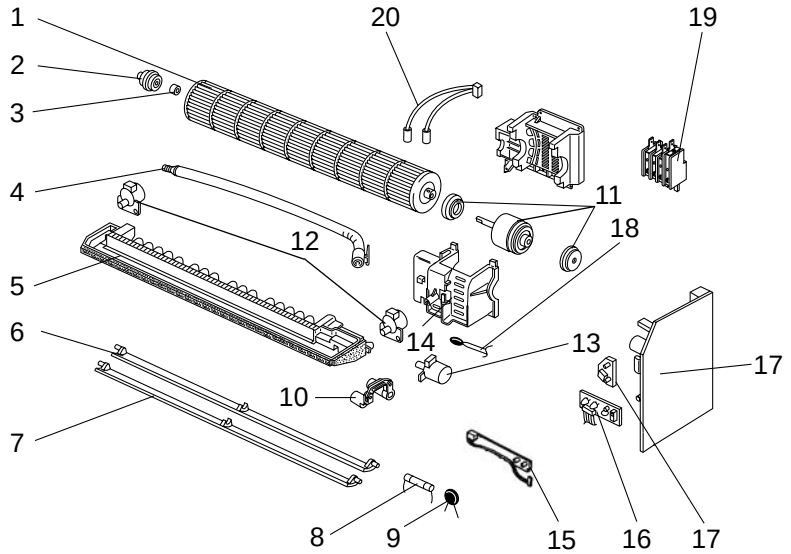

11-4. ACCESSORY AND REMOTE CONTROLLER

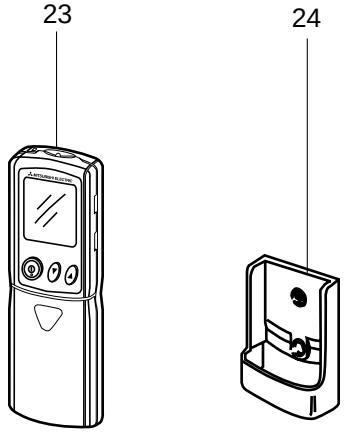

11-3. INDOOR UNIT FUNCTIONAL PARTS AND ELECTRICAL PARTS

Part numbers that are circled are not shown in the illustration.

No.	Part No.	Part Name	Symbol in Wiring Diagram	Q'ty/unit MSZ-GA50 VA - E1	MSZ-GA60 VA - E1	MSZ-GA71 VA - E1	Remarks
1	E02 527 302	LINE FLOW FAN		1	1	1	
2	E02 408 509	BEARING MOUNT		1	1	1	
3	E02 001 504	SLEEVE BEARING		1	1	1	
4	E02 408 702	DRAIN HOSE		1	1	1	
5	E02 A87 235	NOZZLE		1	1	1	
6	E02 685 040	VANE UPPER		1	1	1	
7	E02 685 041	VANE LOWER		1	1	1	
8	E02 A49 382	FUSE	F11	1	1	1	3.15A
9	E02 661 385	VARISTOR	NR11	1	1	1	
10	E02 527 034	VANE CRANK SET		1	1	1	
11	E02 918 300	INDOOR FAN MOTOR ASSEMBLY ※1	MF	1	1	1	RC0J56 - □□
12	E02 448 303	VANE MOTOR (VERTICAL)	MV2	2	2	2	RIGHT & LEFT
13	E02 408 303	VANE MOTOR (HORIZONTAL)	MV1	1	1	1	UP & DOWN
14	E02 918 333	MOTOR BAND		1	1	1	
15	E02 918 329	DISPLAY P.C. BOARD		1	1	1	
16	E02 918 468	RECEIVER P.C. BOARD		1	1	1	
17	E02 918 452	ELECTRONIC CONTROL P.C. BOARD ※2		1			AUTO RESTART
	E02 919 452	ELECTRONIC CONTROL P.C. BOARD ※2			1		AUTO RESTART
	E02 920 452	ELECTRONIC CONTROL P.C. BOARD ※2				1	AUTO RESTART
18	E02 527 308	ROOM TEMPERATURE THERMISTOR	RT11	1	1	1	
19	E02 918 375	TERMINAL BLOCK	TB	1	1	1	
20	E02 918 307	INDOOR COIL THERMISTOR	RT12, RT13	1	1		
	E02 920 307	INDOOR COIL THERMISTOR	RT12, RT13			1	
21	E02 528 034	VANE MOTOR SUPPORT SET(RIGHT)		1	1	1	
22	E02 529 034	VANE MOTOR SUPPORT SET(LEFT)		1	1	1	

※1 Including FAN MOTOR RUBBER MOUNT
※2 Including SW P.C. BOARD

11-4. ACCESSORY AND REMOTE CONTROLLER

23	E02 918 426	REMOTE CONTROLLER		1	1	1	KM05C
24	E02 527 083	REMOTE CONTROLLER HOLDER		1	1	1	

12 RoHS PARTS LIST (RoHS compliant)

MSZ-GA50VA
MSZ-GA60VA
MSZ-GA71VA

12-1. INDOOR UNIT STRUCTURAL PARTS **12-2. INDOOR UNIT HEAT EXCHANGER**

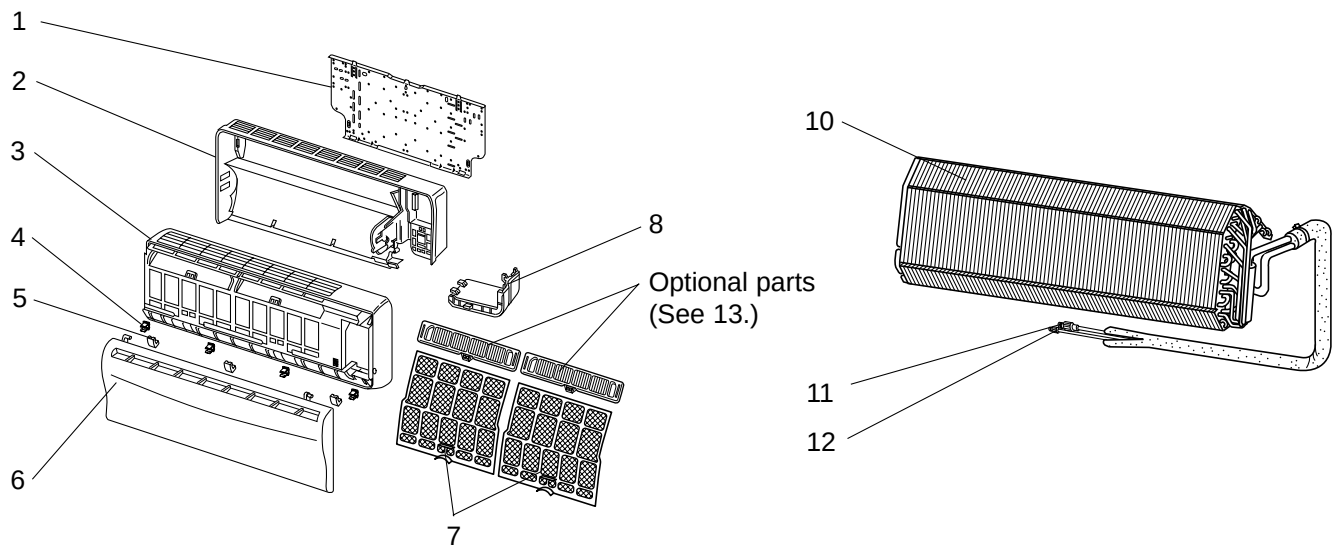

12-1. INDOOR UNIT STRUCTURAL PARTS

Part number that is circled is not shown in the illustration.

No.	RoHS	Part No.	Part Name	Symbol in Wiring Diagram	Q'ty/unit			Remarks
					MSZ-GA50 VA - E1	MSZ-GA60 VA - E1	MSZ-GA71 VA - E1	
1	G	E12 527 970	INSTALLATION PLATE		1	1	1	
2	G	E12 685 234	BOX		1	1	1	
3	G	E12 888 000	FRONT PANEL ASSEMBLY		1	1	1	Including No.4,5,6
4	G	E12 408 142	CATCH		4	4	4	4PCS/ SET
5	G	E12 685 067	SCREW CAP		3	3	3	3PCS/ SET
6	G	E12 888 010	GRILLE		1	1	1	
7	G	E12 534 100	CATECHIN AIR FILTER		2	2	2	1PC/ SET
8	G	E12 685 975	CORNER BOX RIGHT		1	1	1	
9	G	E12 918 007	LAMP PANEL		1	1	1	

12-2. INDOOR UNIT HEAT EXCHANGER

10	G	E12 851 620	INDOOR HEAT EXCHANGER		1	1		
	G	E12 819 620	INDOOR HEAT EXCHANGER				1	
11	G	E12 179 667	UNION (GAS)		1			ϕ12.7
	G	E12 138 666	UNION (GAS)			1	1	ϕ15.88
12	G	E12 151 667	UNION (LIQUID)		1	1		ϕ6.35
	G	E12 527 667	UNION (LIQUID)				1	ϕ9.52

RoHS PARTS LIST (RoHS compliant)

MSZ-GA50VA
MSZ-GA60VA
MSZ-GA71VA

12-3. INDOOR UNIT FUNCTIONAL PARTS AND ELECTRICAL PARTS

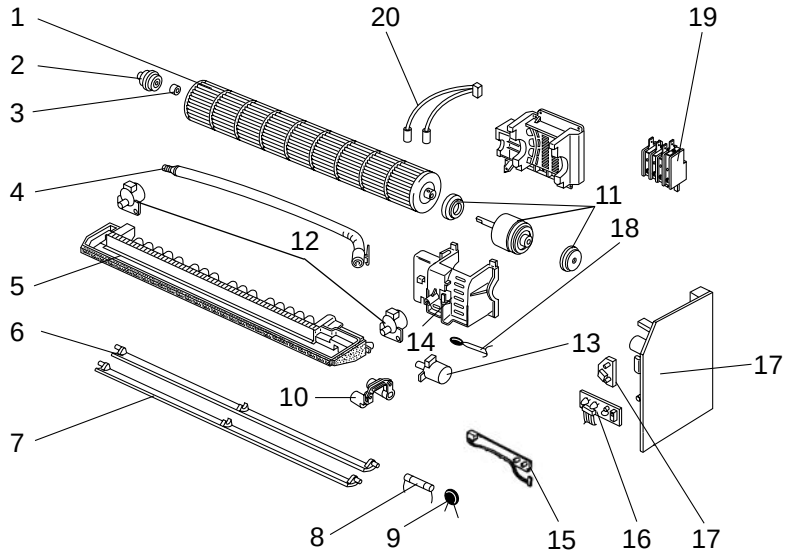

12-4. ACCESSORY AND REMOTE CONTROLLER

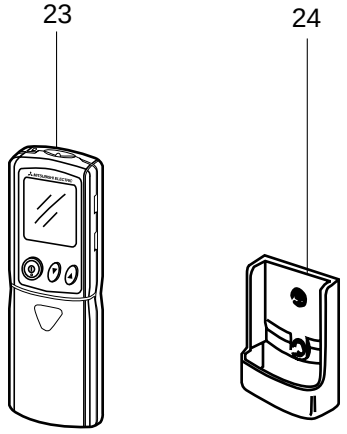

12-3. INDOOR UNIT FUNCTIONAL PARTS AND ELECTRICAL PARTS

Part numbers that are circled are not shown in the illustration.

No.	RoHS	Part No.	Part Name	Symbol in Wiring Diagram	Q'ty/unit MSZ-GA50 VA - E1	MSZ-GA60 VA - E1	MSZ-GA71 VA - E1	Remarks
1	G	E12 527 302	LINE FLOW FAN		1	1	1	
2	G	E12 408 509	BEARING MOUNT		1	1	1	
3	G	E12 001 504	SLEEVE BEARING		1	1	1	
4	G	E12 408 702	DRAIN HOSE		1	1	1	
5	G	E12 A87 235	NOZZLE		1	1	1	
6	G	E12 685 040	VANE UPPER		1	1	1	
7	G	E12 685 041	VANE LOWER		1	1	1	
8	G	E12 A49 382	FUSE	F11	1	1	1	T3.15AL250V
9	G	E12 661 385	VARISTOR	NR11	1	1	1	
10	G	E12 527 034	VANE CRANK SET		1	1	1	
11	G	E12 918 300	INDOOR FAN MOTOR ASSEMBLY ※1	MF	1	1	1	RC0J56 - □□
12	G	E12 448 303	VANE MOTOR (VERTICAL)	MV2	2	2	2	RIGHT & LEFT
13	G	E12 408 303	VANE MOTOR (HORIZONTAL)	MV1	1	1	1	UP & DOWN
14	G	E12 918 333	MOTOR BAND		1	1	1	
15	G	E12 918 329	DISPLAY P.C. BOARD		1	1	1	
16	G	E12 918 468	RECEIVER P.C. BOARD		1	1	1	
17	G	E12 918 452	ELECTRONIC CONTROL P.C. BOARD ※2		1			AUTO RESTART
	G	E12 919 452	ELECTRONIC CONTROL P.C. BOARD ※2			1		AUTO RESTART
	G	E12 920 452	ELECTRONIC CONTROL P.C. BOARD ※2				1	AUTO RESTART
18	G	E12 527 308	ROOM TEMPERATURE THERMISTOR	RT11	1	1	1	
19	G	E12 918 375	TERMINAL BLOCK	TB	1	1	1	
20	G	E12 918 307	INDOOR COIL THERMISTOR	RT12, RT13	1	1		
	G	E12 920 307	INDOOR COIL THERMISTOR	RT12, RT13			1	
21	G	E12 528 034	VANE MOTOR SUPPORT SET(RIGHT)		1	1	1	
22	G	E12 529 034	VANE MOTOR SUPPORT SET(LEFT)		1	1	1	

※1 Including FAN MOTOR RUBBER MOUNT
※2 Including SW P.C. BOARD

12-4. ACCESSORY AND REMOTE CONTROLLER

23	G	E12 918 426	REMOTE CONTROLLER		1	1	1	KM05C
24	G	E12 527 083	REMOTE CONTROLLER HOLDER		1	1	1	

13 OPTIONAL PARTS

AIR CLEANING FILTER (ANTI-ALLERGY ENZYME FILTER)

- AIR CLEANING FILTER removes fine dust of 0.01 micron from air by means of static electricity.
- Normal life of AIR CLEANING FILTER is 1 year.
  If AIR CLEANING FILTER is to be washed, soak AIR CLEANING FILTER in water (when showing dirt, in lukewarm water) and rinse it delicately, without removing the filter from the frame about once every 3 months.
- Clogged AIR CLEANING FILTER may reduce the air conditioner capacity or cause frost on the air outlet.
- Do not remove or attach AIR CLEANING FILTER during unit operation.

Model	Part No.
MSZ-GA50VA MSZ-GA60VA MSZ-GA71VA	MAC-2300FT

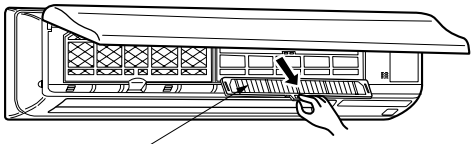

Air cleaning filter
(Anti-allergy enzyme filter:blue bellows type)

MITSUBISHI ELECTRIC CORPORATION
HEAD OFFICE: TOKYO BLDG., 2-7-3, MARUNOUCHI, CHIYODA-KU, TOKYO 100-8310, JAPAN

Distributed in Jan. 2007. No.OB388 REVISED EDITION-C 6
Distributed in May 2006. No.OB388 REVISED EDITION-B 6
Distributed in Sep. 2006. No.OB388 REVISED EDITION-A 6
Distributed in Jan. 2005. No.OB388 6
Made in Japan

New publication, effective Jan. 2007
Specifications subject to change without notice.